DUETTE TABLE

96W x 42D x 29H

Shown in optional Claro Walnut top with live edge and Claro Toned Walnut base.

The Duette's table top is formed by a pair of solid wood planks with a center reveal. This version features an exquisite matched set of live edge Oregon Walnut boards. The modern trestle style base renders an aesthetically balanced support structure.

Altura Furniture, Inc. 3500 N Mississippi Avenue, Portland, OR 97227 **TEL** 503 288 2228 **FAX** 503 288 2555 **WEB** alturafurniture.com

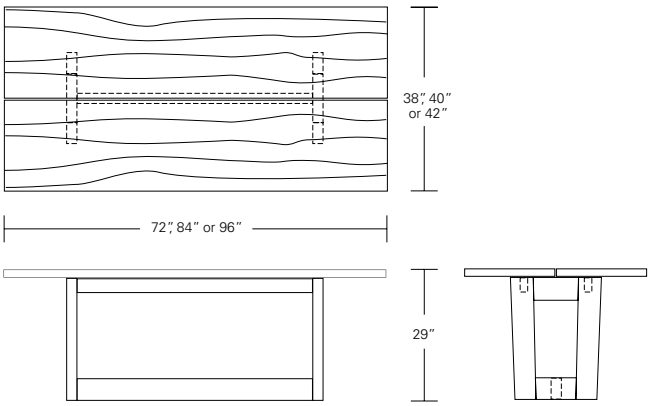

Duette Table
72"W x 38"D x 29"H
84"W x 40"D x 29"H
96"W x 42"D x 29"H

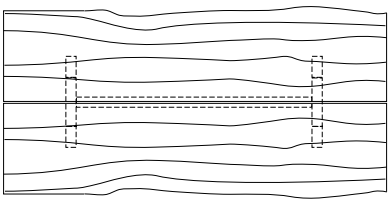

Duette Live Edge Option

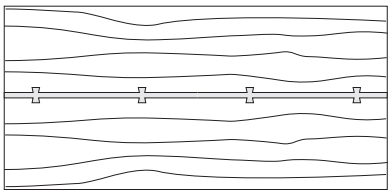

Duette Butterfly Option

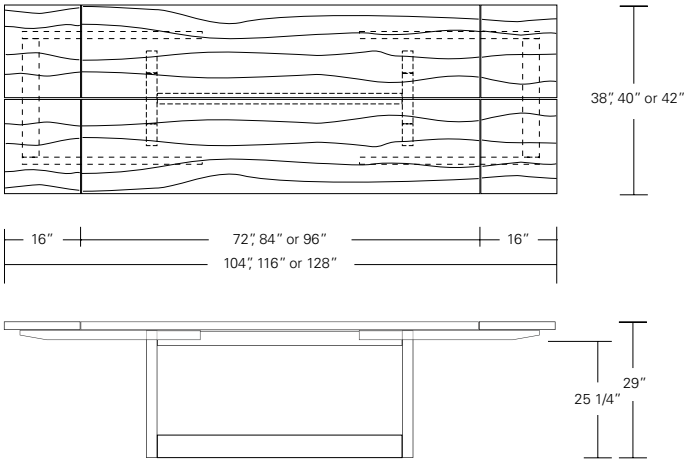

Duette Extension Table
72"W (104" w/two 16" leaves) x 38"D x 29"H
84"W (116" w/two 16" leaves) x 40"D x 29"H
96"W (128" w/two 16" leaves) x 42"D x 29"H
Continuous grain upon availability

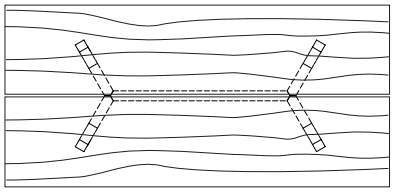

Duette Table V Base

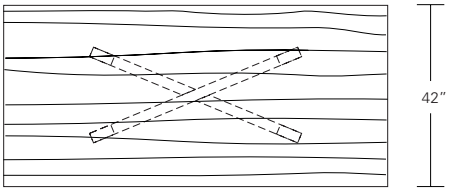

Duette Table X Base
72"W x 42"D x 29"H
84"W x 42"D x 29"H
96"W x 42"D x 29"H

DESCRIPTION	FINISH OPTIONS	
Duette Table: Solid wood table top. Solid wood base with levelers. **Standard Options:** Extension version. Butterfly inlay in satin brass, dark bronze or satin stainless steel. **Custom Orders:** Custom sizes, woods and finishes are available. Please request a price quotation.	**Standard - Natural / Stained:**	**Premium - Cerused / Bleached:**
	Ash, Bronze Ash, Burnt Ash, Ebonized Ash, Grey Ash, Mahogany, Medium Mahogany, Oak, Bluff Oak, Grey Oak, Fumed Oak, Walnut, Medium Walnut, Dark Walnut, Ebonized Walnut, Grey Walnut, Silver Walnut, Terra Walnut, Bronze Walnut, Claro Toned Walnut.	Bleached Ash, Cerused Ash, Cerused Bronze Ash, Cerused Burnt Ash, Cerused Mahogany, Cerused Dark Mahogany, Bleached Walnut, Cerused Walnut, Cerused Grey Walnut, Cerused Silver Walnut, Cerused Bronze Walnut, Cerused Oak.
	Custom Finishes Claro Walnut table top with square edge - at additional cost. Claro Walnut* table top with live edge (square only). - at additional cost.	

Altura Furniture, Inc. 3500 N Mississippi Avenue, Portland, OR 97227 TEL 503 288 2228 FAX 503 288 2555 WEB alturafurniture.com